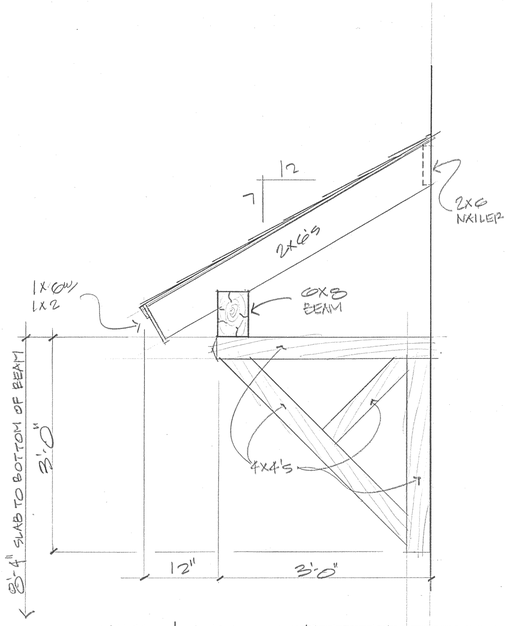

SHED & BRACKET DETAIL

SCALE: 1"=1'-0"

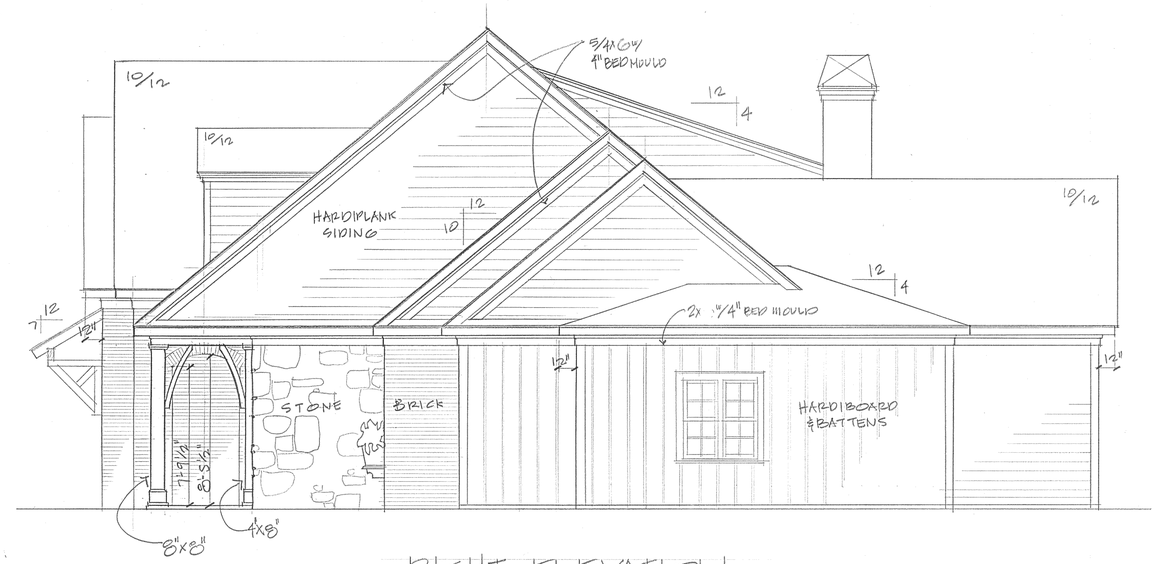

RIGHT ELEVATION

SCALE: 1/4"=1'-0"

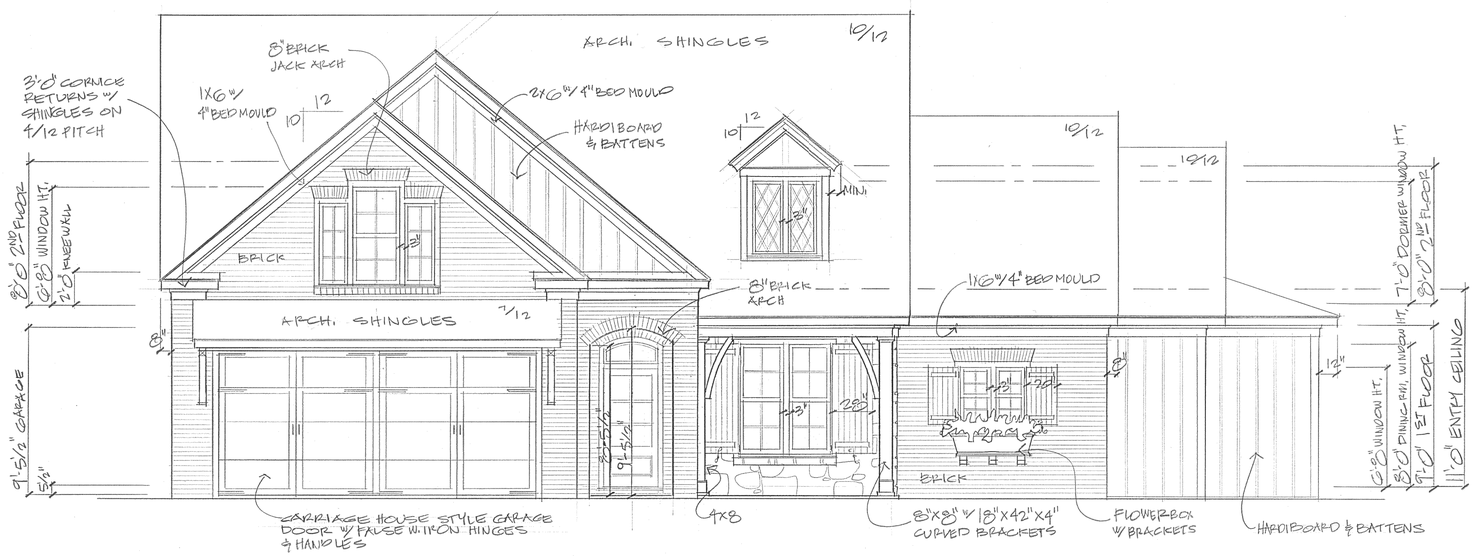

FRONT ELEVATION

SCALE: 1/4"=1'-0"

REVISION	BY

TRADITIONAL RESIDENTIAL DESIGN SINCE 1985

L. Mitchell Ginn & Assoc.

1881 NORTH HIGHWAY 29 NEWNAN, GEORGIA 30263

PHONE/FAX# (770)502-1423 WWW.GINNHOMEDESIGN.COM

PROJECT: FISHWAY
DAVID LINDSEY HOMES

IMPORTANT NOTE:
CONTRACTOR TO CHECK ALL DIMENSIONS BEFORE CONSTRUCTION. STRUCTURAL REQUIREMENTS ARE TO BE VERIFIED OR DETERMINED BY CONTRACTOR OR STRUCTURAL ENGINEER. CONTRACTOR MUST VERIFY COMPLIANCE WITH ALL LOCAL BUILDING AND FIRE CODES.

DATE: 09/27/10

DRAWN BY: DVD

CHECKED BY: LMG

JOB NO: 09062

SHEET 1B

OF SHEETS

2 HRS
2.5 HRS